PART NAME	NEMA 4X DIE CAST ALUMINUM ENCLOSURE	PART No.	SE1318	REVISION DATE	8/18/2010

BODY ASSEMBLY

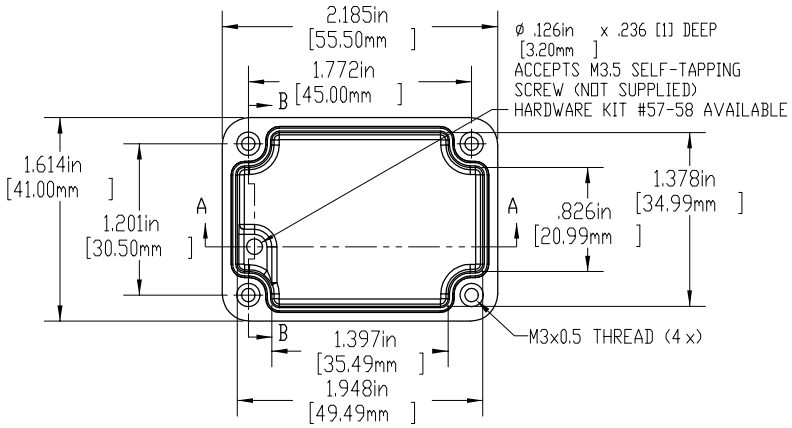

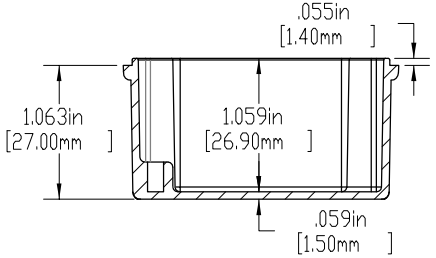

SECTION A-A

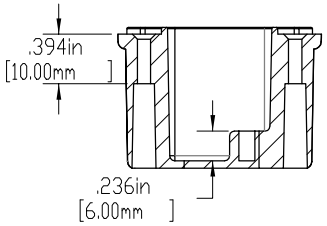

SECTION B-B

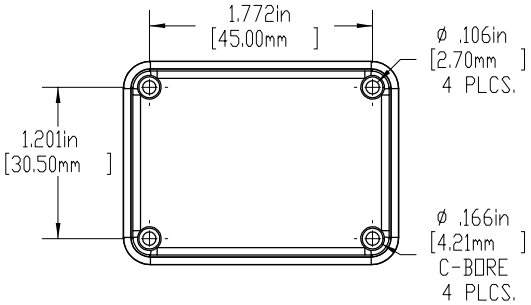

COVER

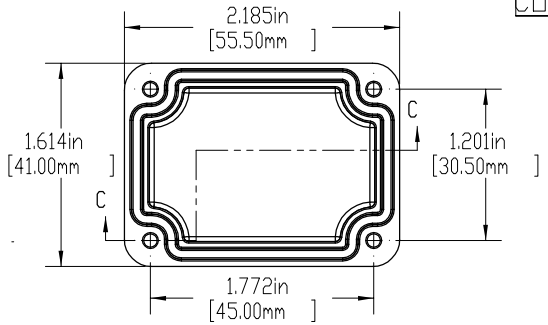

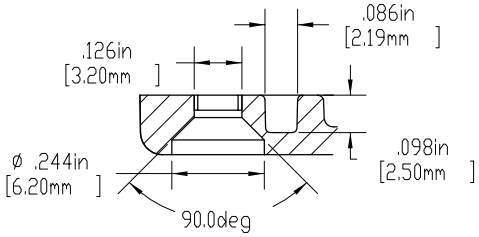

DETAIL D
SCALE 3 : 1

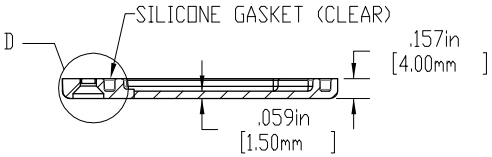

SECTION C-C

ASSEMBLY

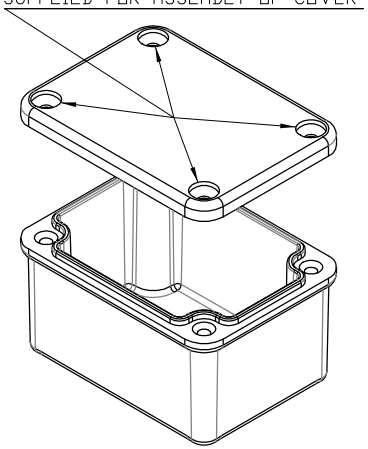

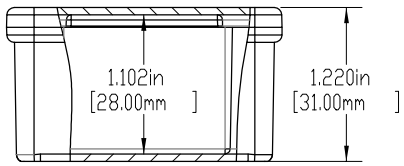

MATERIAL : ALUMINUM (ADC-12 ALLOY)

FINISH NATURAL

TOLERANCES : ±.015 [±.38]