PART NAME	NEMA 4X DIE CAST ALUMINUM ENCLOSURE	PART No.	SE1322A	REVISION DATE	8/18/2010

BODY ASSEMBLY

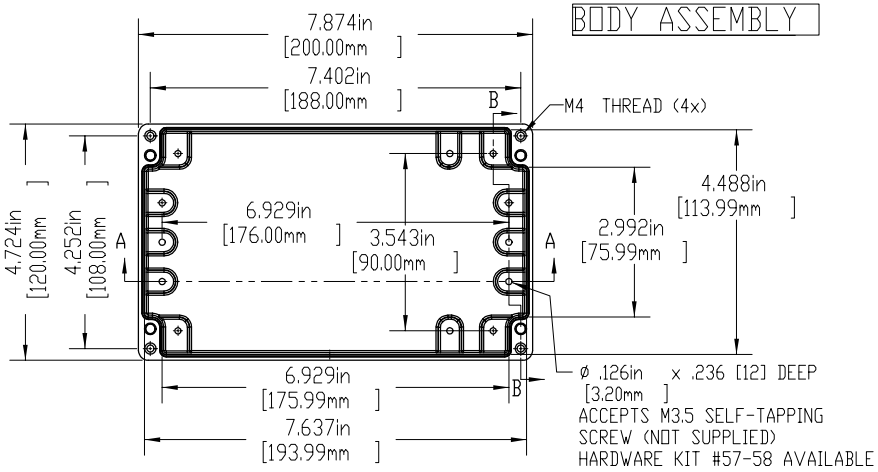

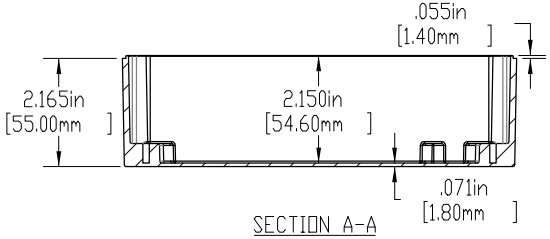

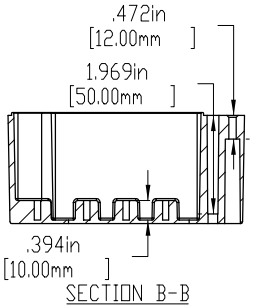

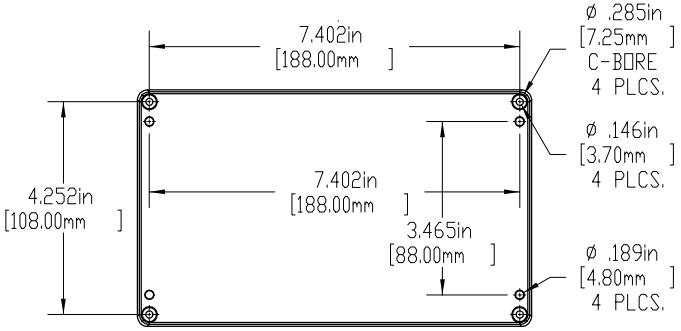

COVER

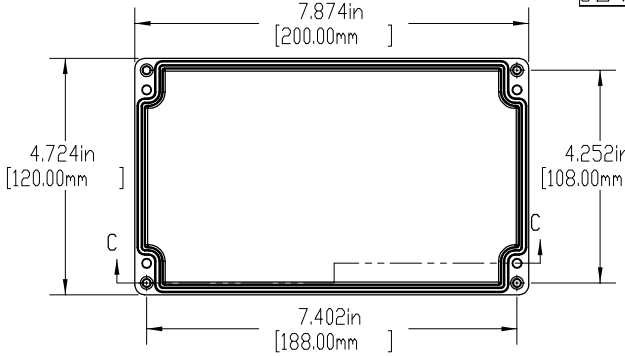

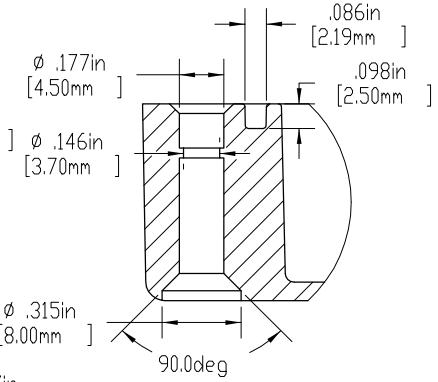

DETAIL D
SCALE 2 : 1

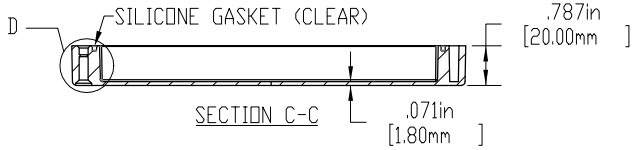

SECTION C-C

ASSEMBLY

FOUR (4) M4 x 32mm (1.26") LG. FLAT HD. STAINLESS STEEL SCREWS SUPPLIED FOR ASSEMBLY OF COVER

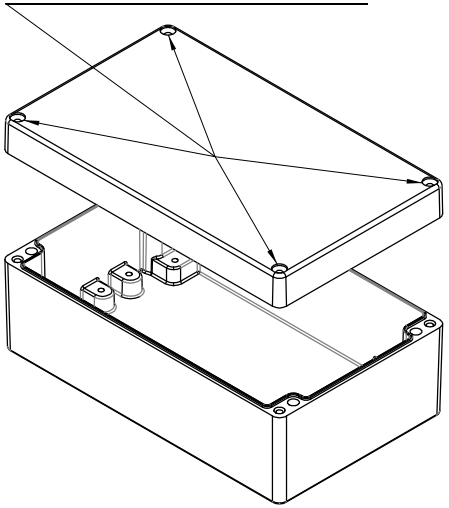

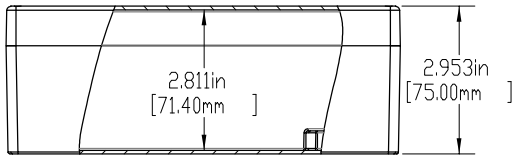

MATERIAL : ALUMINUM (ADC-12 ALLOY)

FINISH NATURAL

TOLERANCES : ±.015 [±.38]