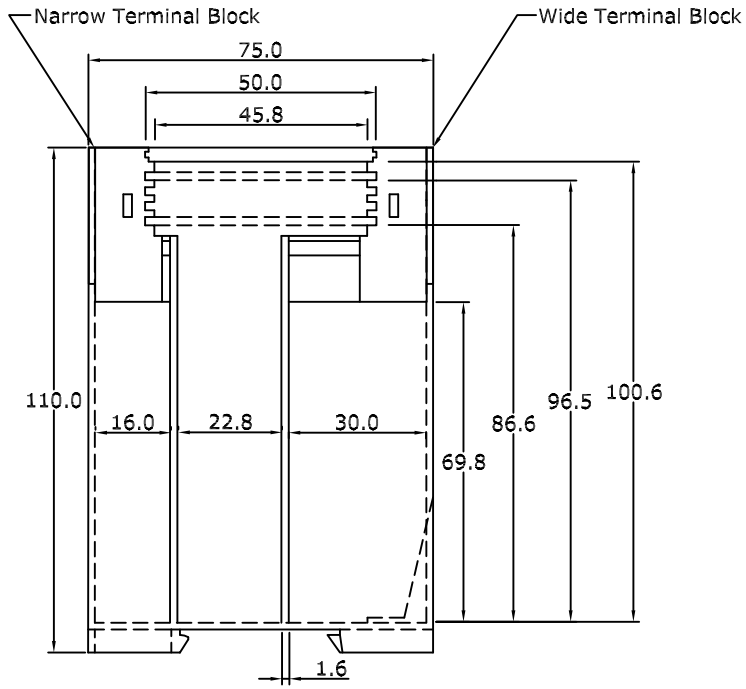

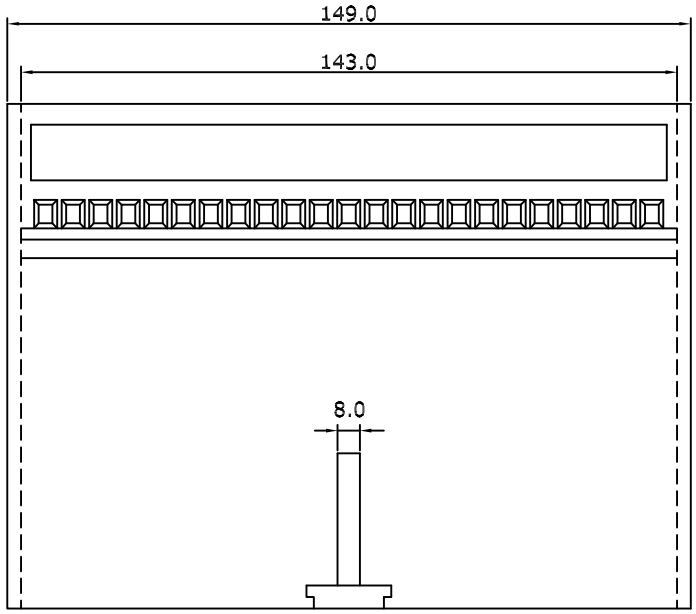

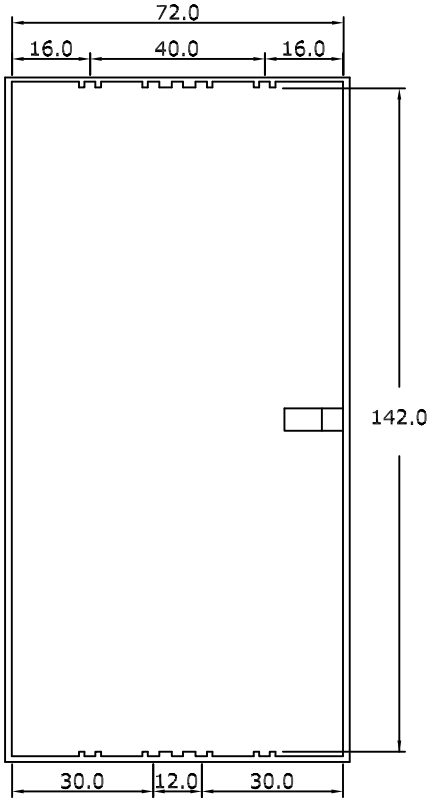

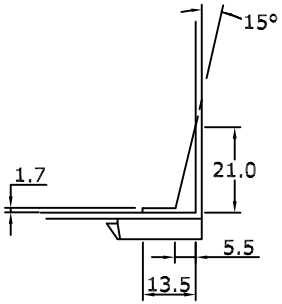

JIT Components, Inc.

www.jit-components.com

DR46
ENCLOSURE LAYOUT

TOLERANCES UNLESS OTHERWISE SPECIFIED		DESIGNER	DATE
2 PLACE DECIMALS (IN) ± .02 3 PLACE DECIMALS (IN) ± .005 4 PLACE DECIMALS (IN) ± .0005 ANGLES ± .5° METRIC (MM) ± .15		JRK	11/14/00
		SHEET 1OF1	SCALE
MATERIAL			REV