PART NUMBER	MATERIAL		FINISH		HARDWARE KIT
	BODY	COVER	BODY	COVER	
PN-1321 AND PN-1322	POLYCARBONATE		LIGHT GRAY		KIT CONTAINS (4) M4 x 20mm (0.787") LG. SCREWS FOR ASSEMBLY
PN-1321-C AND PN-1322-C	POLYCARBONATE		LIGHT GRAY	CLEAR	
PN-1321-DG AND PN-1322-DG	HIGH-IMPACT ABS		DARK GRAY		

NOTE: ALL DIMENSIONS HAVE ±0.015 TOLERANCE UNLESS OTHERWISE SPECIFIED.

INDUSTRY STANDARDS:

POLYCARBONATE (LIGHT GRAY AND CLEAR)
- UL94V-2 FLAMMABILITY RATING (UL FILE #E41613)
- UV STABILIZED
- SERVICE TEMPERATURE RANGE: -40°C TO +120°C

ABS (DARK GRAY)
- UL94-HB FLAMMABILITY RATING (UL FILE #E56070)
- SERVICE TEMPERATURE RANGE: -40°C TO +80°C

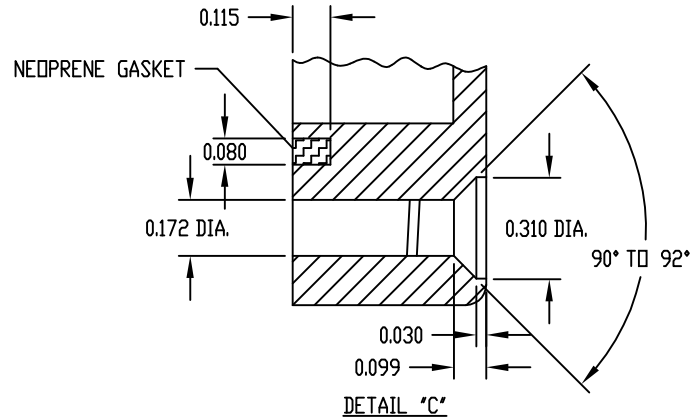

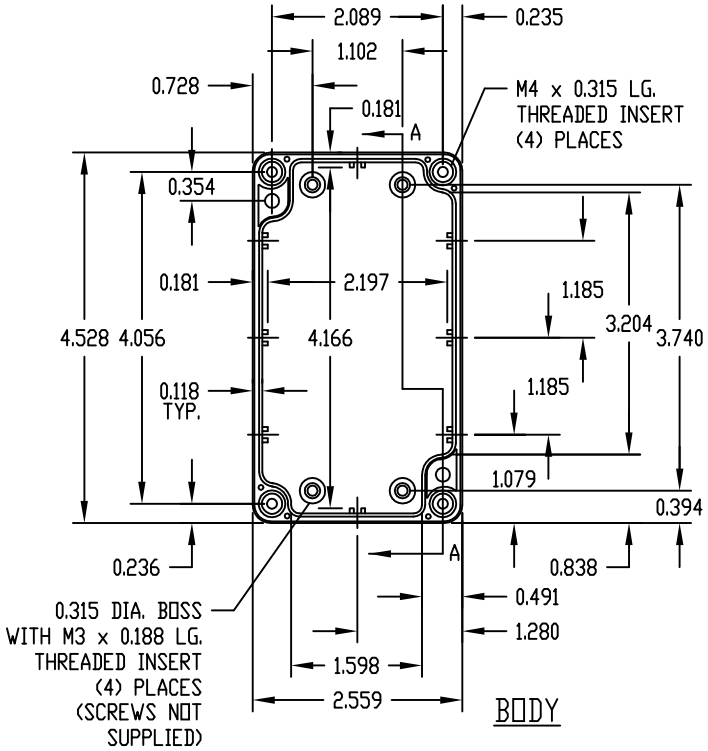

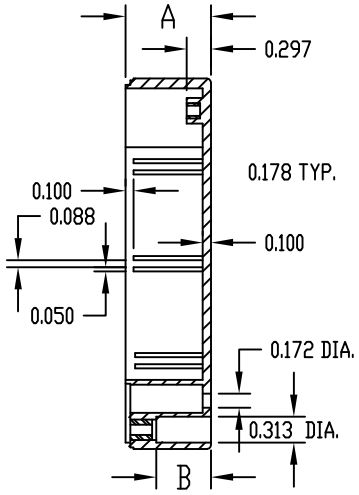

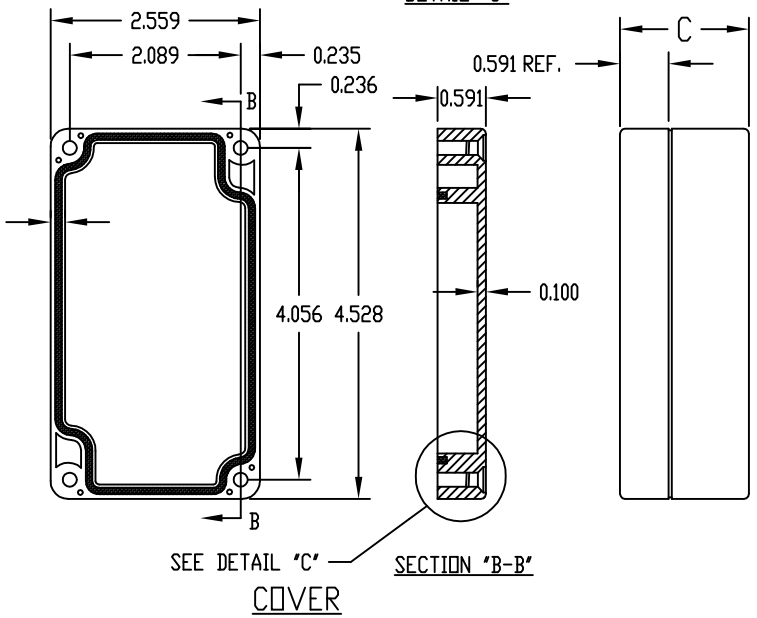

PART NUMBER	DIMENSION		
	A	B	C
PN-1321, PN-1321-C AND PN-1321-DG	1.045	0.670	1.576
PN-1322, PN-1322-C AND PN-1322-DG	1.640	1.189	2.165

REV	DATE	DESCRIPTION	BY

JIT Components, Inc.

www.jit-components.com

SE1322, SE1322C, SE1322DG ENCLOSURE LAYOUT

TOLERANCES UNLESS OTHERWISE SPECIFIED
2 PLACE DECIMALS (IN) ± .02
3 PLACE DECIMALS (IN) ± .005
4 PLACE DECIMALS (IN) ± .0005
ANGLES ± .5°
METRIC (MM) ± .15

DESIGNER

DATE 09/09/98

SHEET

SCALE

MATERIAL

REV