INDUSTRY STANDARDS:

POLYCARBONATE (LIGHT GRAY AND CLEAR)
- UL94V-2 FLAMMABILITY RATING (UL FILE #E41613)
- UV STABILIZED
- SERVICE TEMPERATURE RANGE: -40°C TO +120°C

ABS (DARK GRAY)
- UL94-HB FLAMMABILITY RATING (UL FILE #E56070)
- SERVICE TEMPERATURE RANGE: -40°C TO +80°C

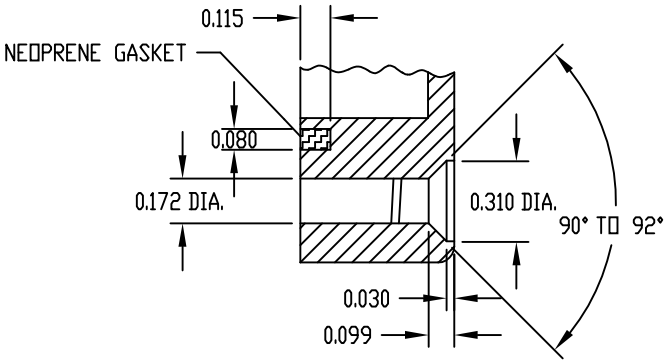

DETAIL "C"

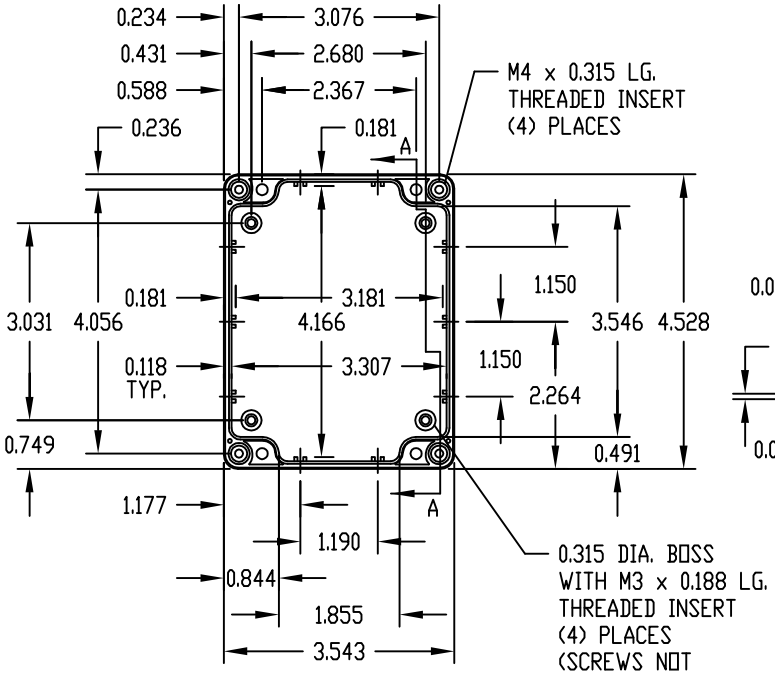

BODY

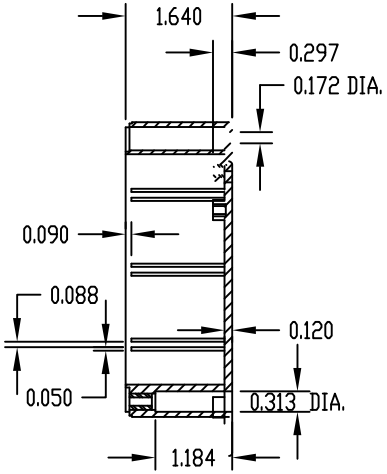

SECTION "A-A"

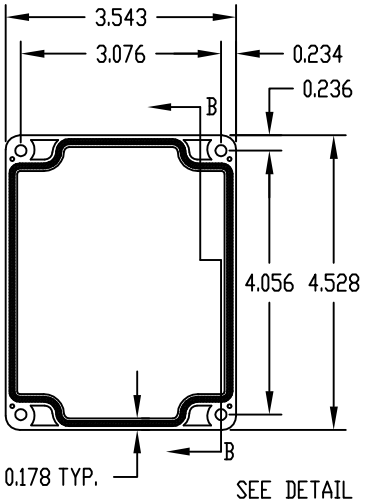

COVER

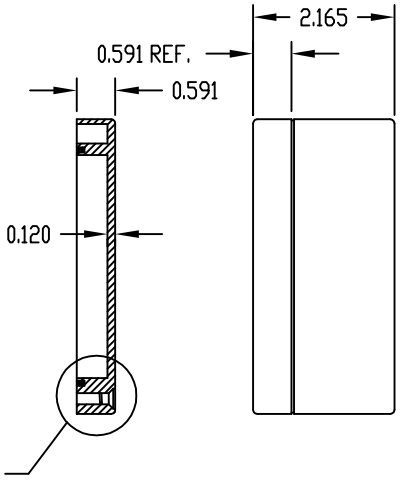

SECTION "B-B"

NOTE: ALL DIMENSIONS HAVE ±0.015 TOLERANCE UNLESS OTHERWISE SPECIFIED.

PART NUMBER	MATERIAL		FINISH		HARDWARE KIT
	BODY	COVER	BODY	COVER	
PN-1323	POLYCARBONATE		LIGHT GRAY		KIT CONTAINS (4) M4 x 20mm (0.787") LG. SCREWS FOR ASSEMBLY
PN-1323-C	POLYCARBONATE		LIGHT GRAY	CLEAR	
PN-1323-DG	HIGH-IMPACT ABS		DARK GRAY		

REV	DATE	DESCRIPTION	BY

JIT Components, Inc.

www.jit-components.com

SE1323, SE1323C, SE1323DG ENCLOSURE LAYOUT

TOLERANCES UNLESS OTHERWISE SPECIFIED
2 PLACE DECIMALS (IN) ± .02
3 PLACE DECIMALS (IN) ± .005
4 PLACE DECIMALS (IN) ± .0005
ANGLES ± .5°
METRIC (MM) ± .15

DESIGNER

DATE 09/09/98

SHEET

SCALE

MATERIAL

REV