INDUSTRY STANDARDS:

POLYCARBONATE (LIGHT GRAY AND CLEAR)
- UL94V-2 FLAMMABILITY RATING (UL FILE #E41613)
- UV STABILIZED
- SERVICE TEMPERATURE RANGE: -40°C TO +120°C

ABS (DARK GRAY)
- UL94-HB FLAMMABILITY RATING (UL FILE #E56070)
- SERVICE TEMPERATURE RANGE: -40°C TO +80°C

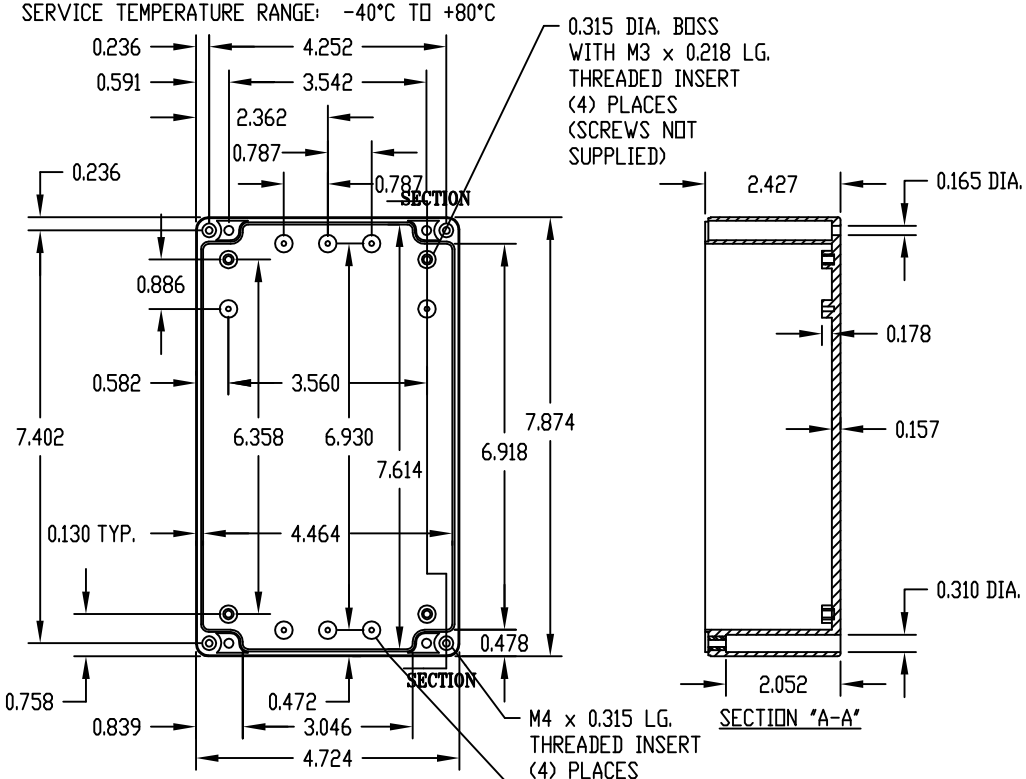


BODY

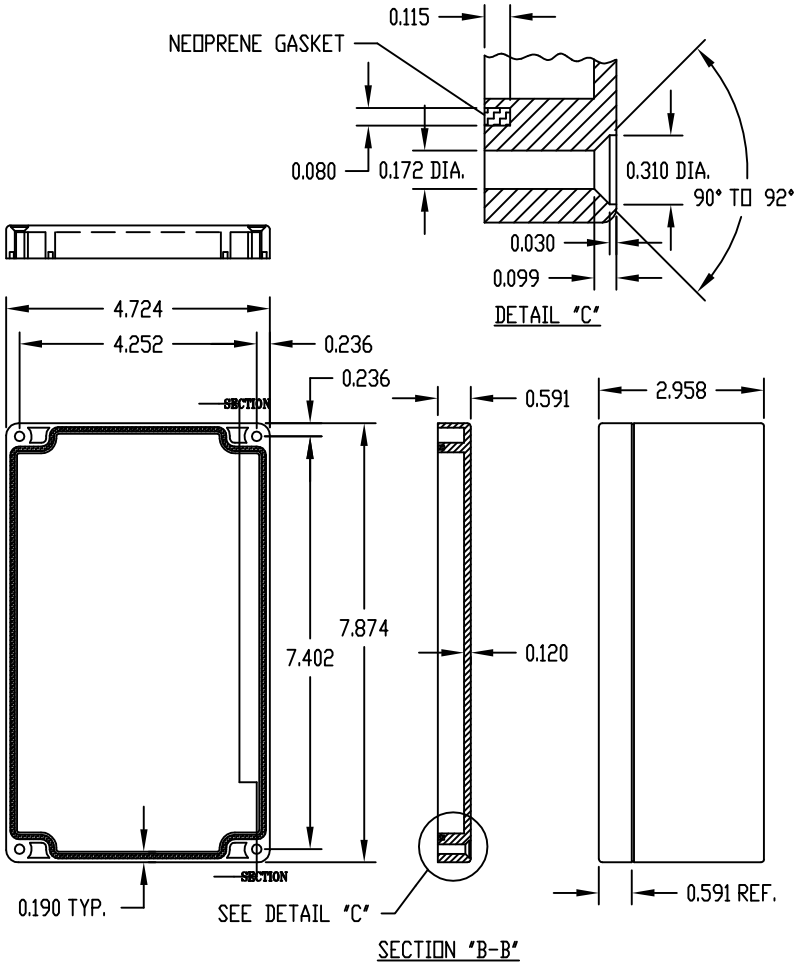


COVER

NOTE: ALL DIMENSIONS HAVE ±0.015 TOLERANCE UNLESS OTHERWISE SPECIFIED.

| PART NUMBER | MATERIAL | | FINISH | | HARDWARE KIT |
|---|---|---|---|---|---|
| | BODY | COVER | BODY | COVER | |
| PN-1334 | POLYCARBONATE | | LIGHT GRAY | | KIT CONTAINS (4) M4 x 20mm (0.787") LG. SCREWS FOR ASSEMBLY |
| PN-1334-C | POLYCARBONATE | | LIGHT GRAY | CLEAR | |
| PN-1334-DG | HIGH-IMPACT ABS | | DARK GRAY | | |

| REV | DATE | DESCRIPTION | BY |
|---|---|---|---|
| | | | |
| | | | |
| | | | |
| | | | |
| | | | |

JIT Components, Inc.

www.jit-components.com

SE1334, SE1334C, SE1334DG ENCLOSURE LAYOUT

TOLERANCES UNLESS OTHERWISE SPECIFIED
- 2 PLACE DECIMALS (IN) ± .02
- 3 PLACE DECIMALS (IN) ± .005
- 4 PLACE DECIMALS (IN) ± .0005
- ANGLES ± .5°
- METRIC (MM) ± .15

DESIGNER

DATE 06/23/99

SHEET

SCALE

MATERIAL

REV